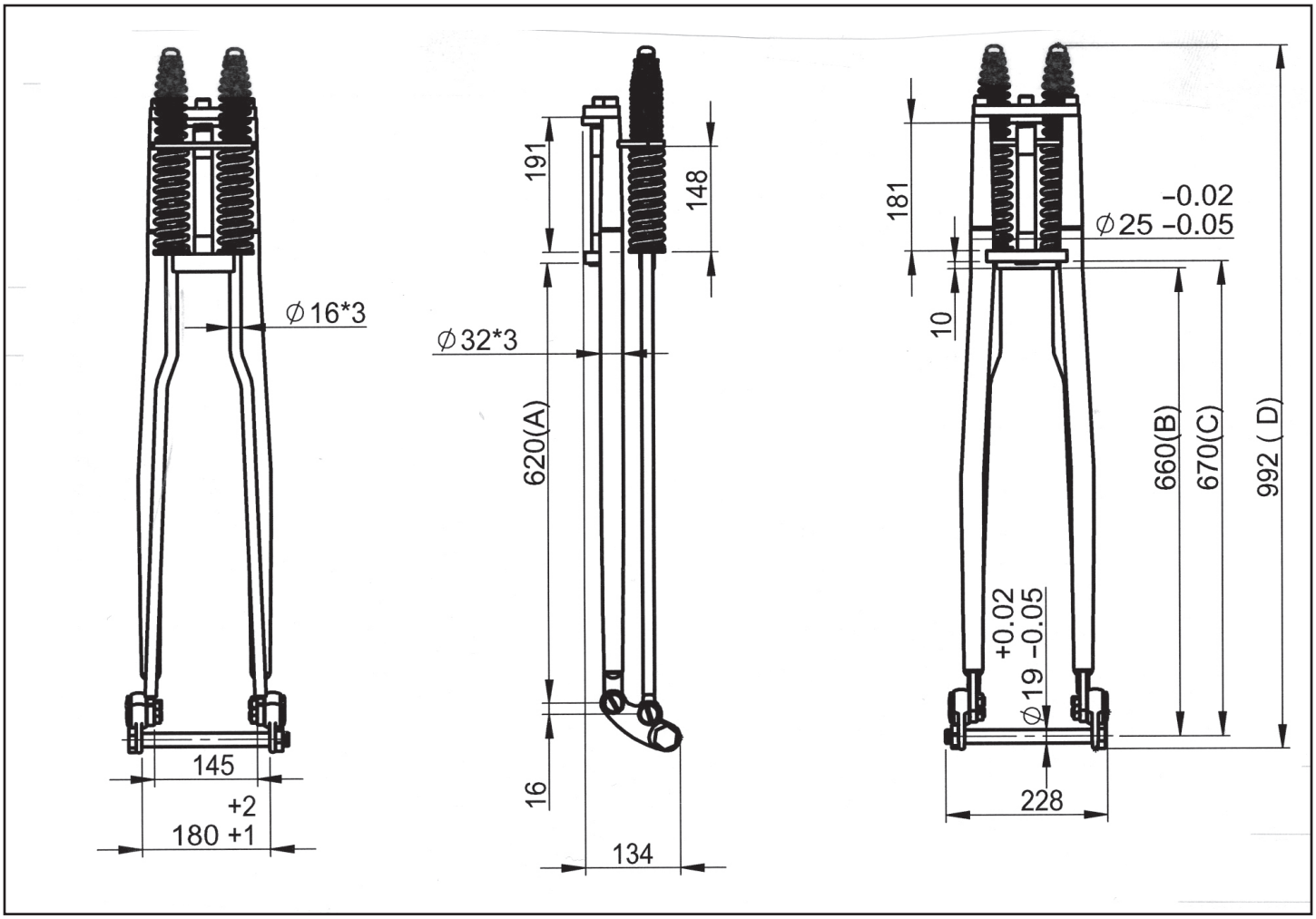


# Height Measured (C)

# Width for Wheel Hub (180mm)

# Measurements in (MM)