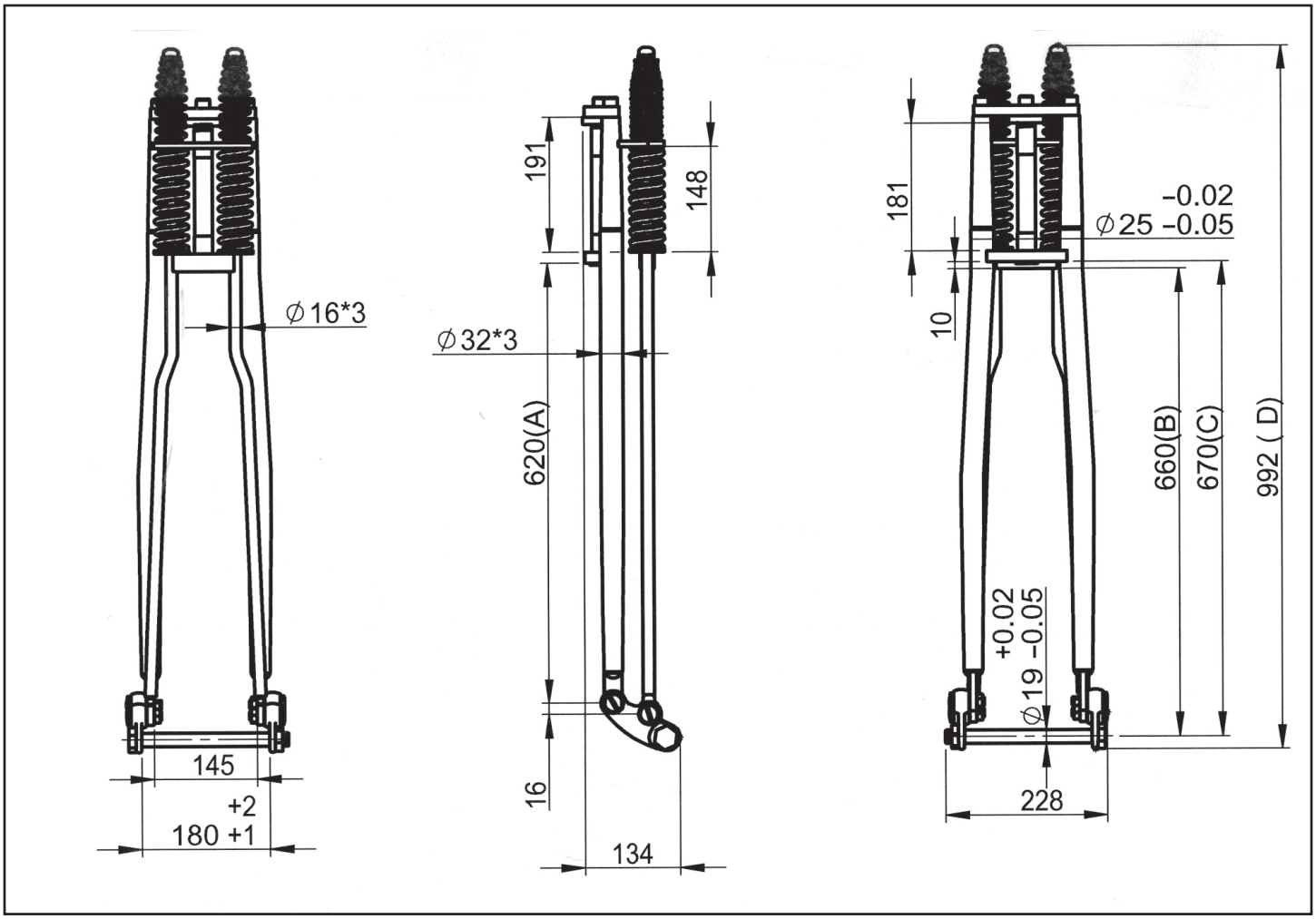

Height Measured (C)

Width for Wheel Hub (180mm)

Measurements in (MM)